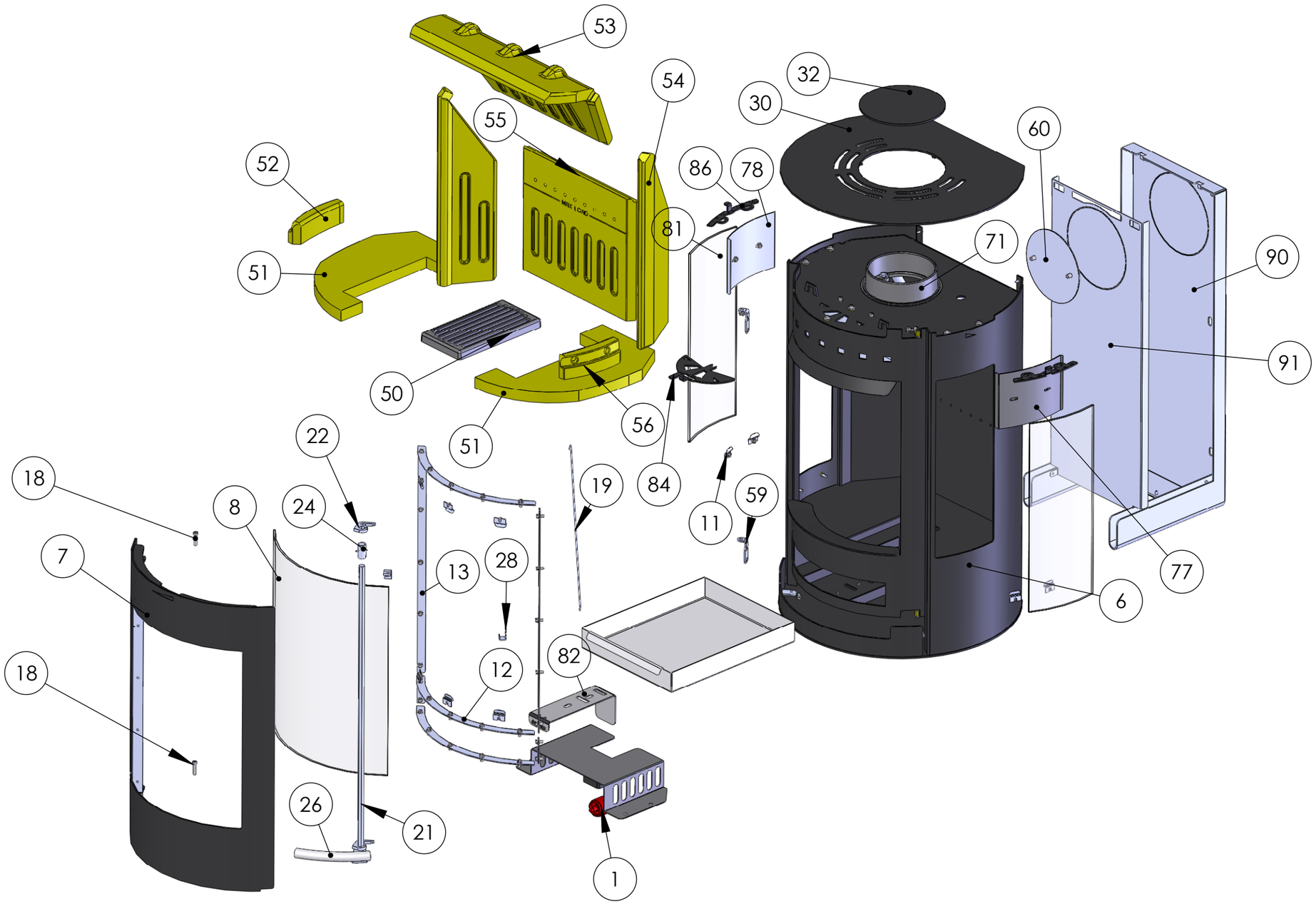

2011-05-25 ADURO 9-4 Exploded